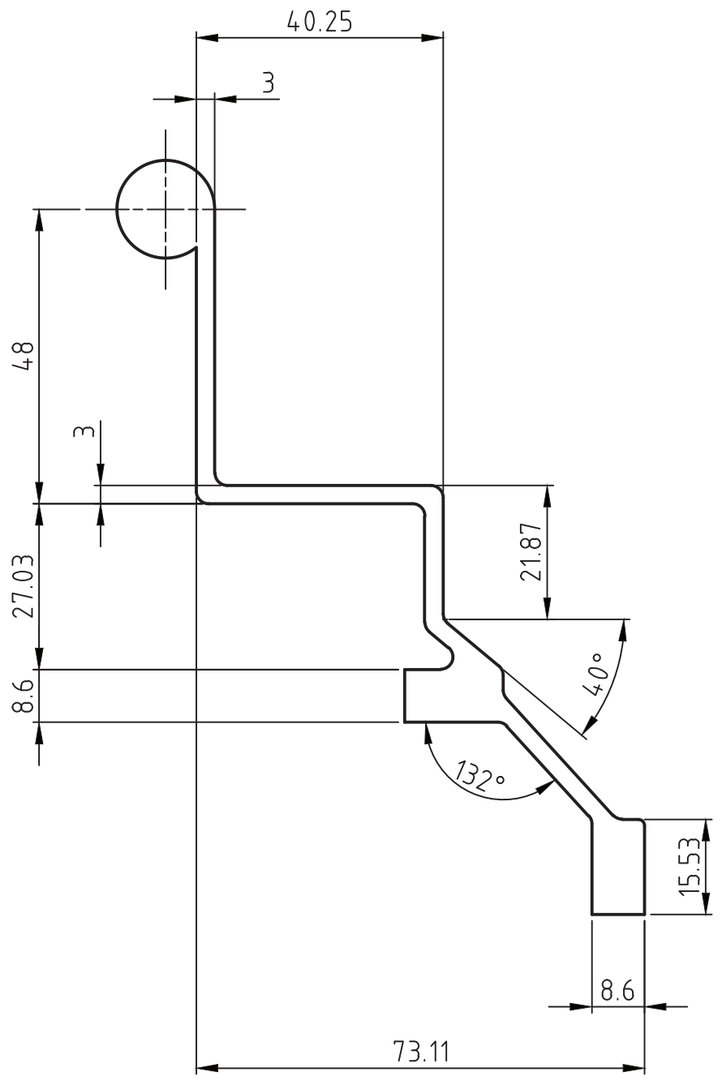
40.25
3
48
3
27.03
8.6
21.87
40°
132°
15.53
8.6
73.11

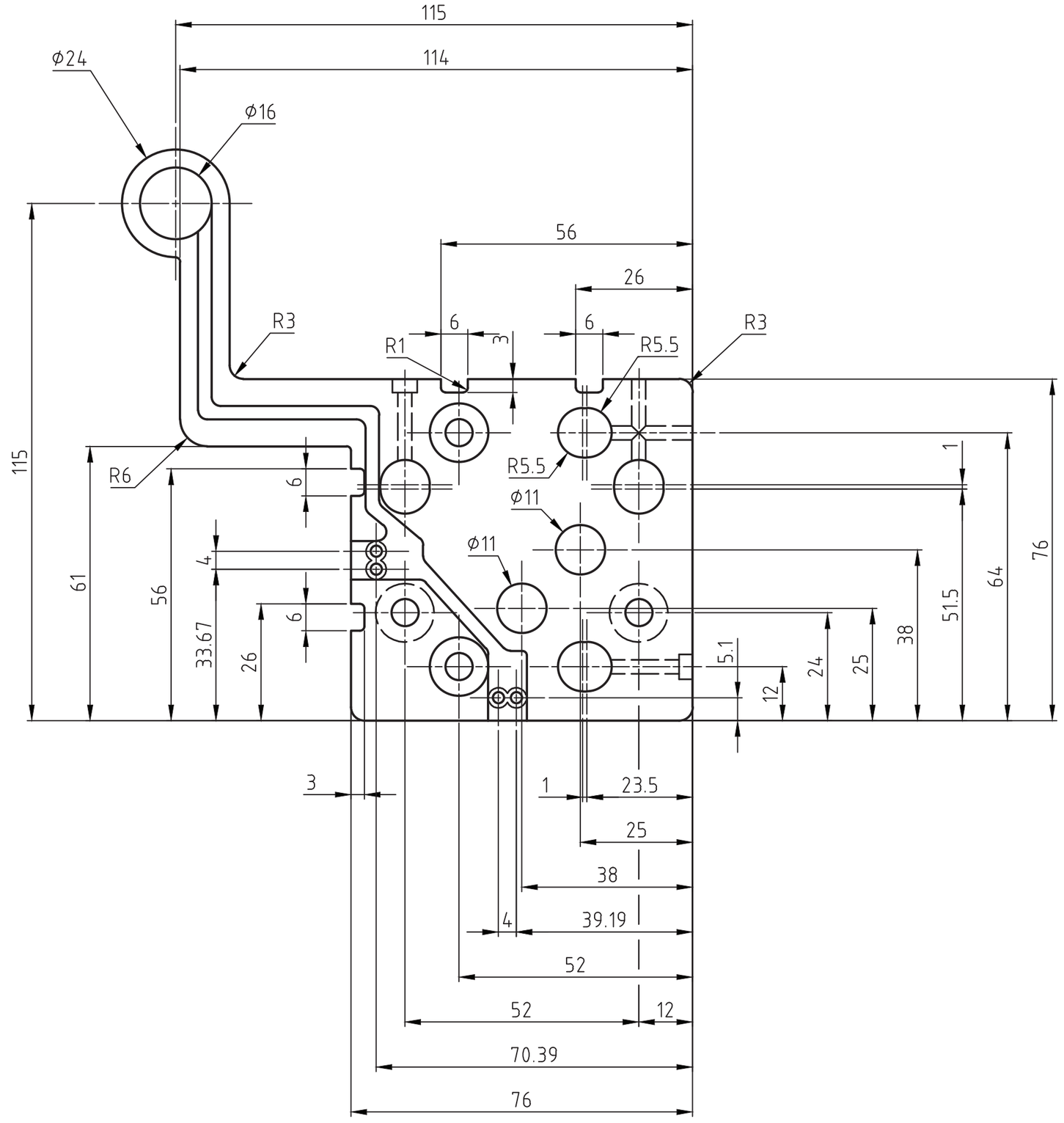
115
114
Φ24
Φ16
56
26
R3
R1
6
3
6
R5.5
R3
115
R6
6
R5.5
Φ11
Φ11
1
61
56
4
33.67
26
6
64
76
51.5
38
25
24
12
5.1
3
1
23.5
25
38
4
39.19
52
52
12
70.39
76

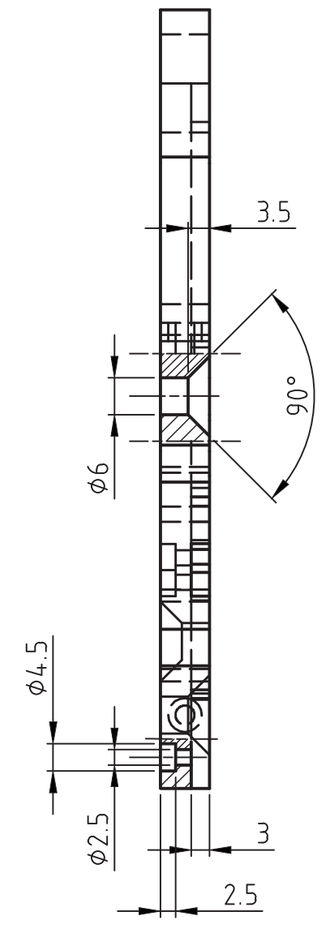
3.5
90°
Φ6
Φ4.5
Φ2.5
3
2.5

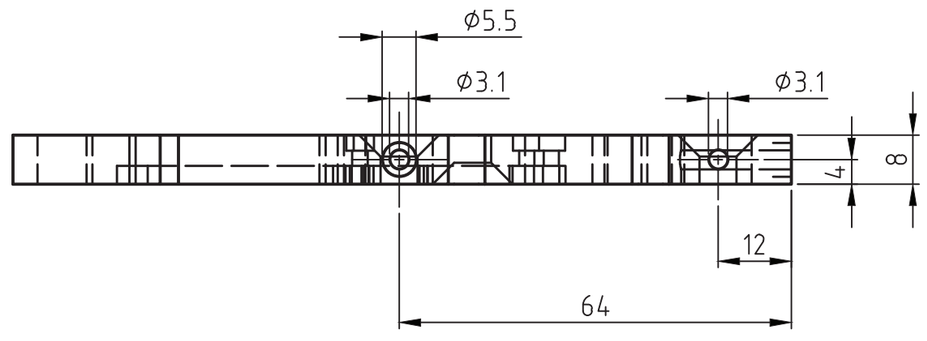
Φ5.5
Φ3.1
Φ3.1
4
8
12
64